FLG

Deck-Mounting Flange for Marine Antennas Based on Mounting on 1” Threaded Water Pipe

PROCOM

DESCRIPTION:

- ★ Using this flange all antennas specifically designed for mounting on 1” threaded water pipe can be mounted on deck, wheelhouse roof, cabin roof or any other horizontal or near-horizontal surface.
- ★ Inside the marine sector the 1” water pipe mounting system for antennas has gained worldwide acceptance. The antennas are equipped with a revolving nut, which fits 1” threaded water pipe. From the PROCOM line of marine antennas the following models, which are designed for this type of fixation, can be mentioned: CXL 3-1, CXL 2-1, CXL 2-3, CXL-VHF/GSM, MARCELL, MARCELL 3+, CXL 70-1/…, CXL 70-3/..., CXL 900-1/…, CXL 900-3/…, CXL 1800-1/…, CXL 1800-3/..., CXL 1800-6/..., CXL 2400-1/..., CXL 2400-3/..., CXL 2400-6/...,CXL 900/1800 and GPS 4/…. These antenna types are immediately installable using the FLG.
- ★ The FLG is made of triple chrome-plated solid brass. The supplied fittings are made of stainless steel.
- ★ The accompanying tapered spacer is used to compensate for inclining surfaces to make the antenna stand in a vertical position. The disc is made of UV-stabilized plastic and is able to level out deck-tilting up to 7.5°.
- ★ Please note that an antenna should always be mounted as unobstructed as possible. Objects in the vicinity of the antenna, especially parallel metallic parts (other antennas, wires etc.) may have considerable degrading influence on the SWR and the radiation pattern of the antenna.
- ★ The FLG deck mounting clamp is a member of a complete family of PROCOM clamps for 1”-pipe mount antennas. The complete family is shown below. Using the FLG or one of these accessory items, a vast majority of all installations can be undertaken.

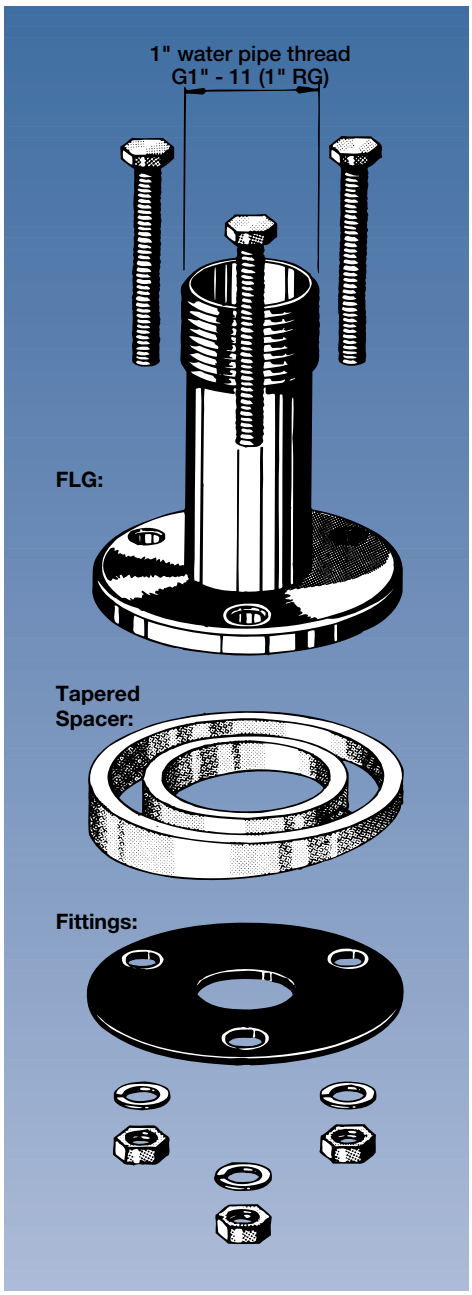

SPECIFICATIONS:

MODEL	FLG
APPLICATION	Deck-mounting flange for antennas for 1” water pipe fixation
MATERIAL	Triple-chromed solid brass
COLOUR	Bright chromium
THREAD	G1” - 11 (1” RG water pipe thread)
HEIGHT	Approx. 82 mm
WEIGHT	Approx. 0.45 kg
MOUNTING	On horizontal surfaces or surfaces with inclination up to 7.5°

INSTALLATION DETAILS:

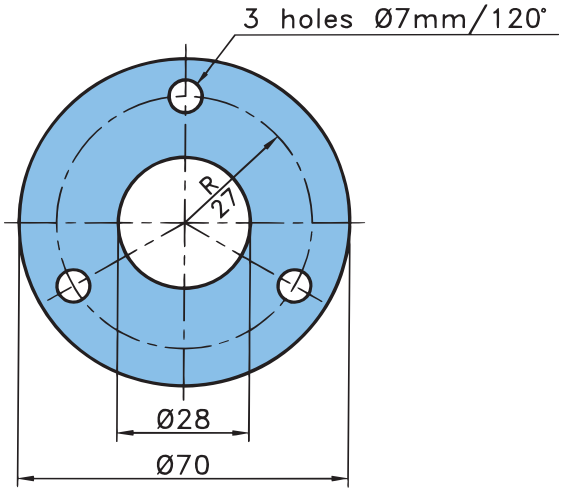

OTHER ACCESSORIES:

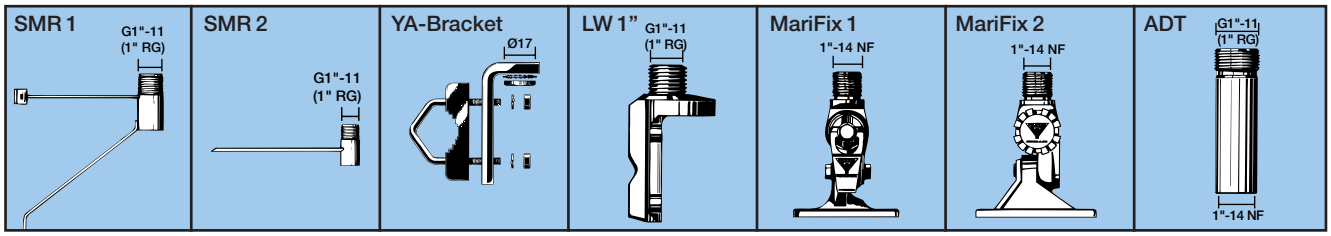

PROCOM A/S reserve the right to amend specifications without prior notice.

02.2004